Clearwell mobility

Mallow

MOBILITY SCOOTER
USER MANUAL

MODEL:
SERIAL NUMBER:
DATE OF PURCHASE:

Contents **Page**

Intended Use of the Vehicle	2
Dashboard Controls	3
Freewheeling & Main Circuit Breaker	4
Adjustments	5
Disassembly	6
Assembly	7
Battery Charging	8
Simple Maintenance	9
Hazards	10-11
Troubleshooting	12-13
Warranty	14
Technical Specification	15

Intended Use Of The Vehicle

This vehicle is designed to help a single person (up to the maximum recommended weight) who requires a scooter for their mobility. The scooter is intended for indoor use in large areas and outside use up to a maximum speed of 4mph. It is not intended to be used for towing or in use in muddy or soft areas of ground. Users could endanger themselves and others if they are not capable of driving the scooter safely. It is up to the users to ensure that they have the manual dexterity to drive the vehicle, adequate sight and hearing to perceive danger in time, and can at all times operate the scooter safely. If in doubt we suggest you consult a healthcare professional for advice.

Modifications

Any modifications to the specifications will invalidate the warranty and may render the vehicle dangerous.

Clearwell Mobility
Technical Support Helpline

01444 253 300

Before driving your vehicle it is important to familiarise yourself with the controls.
Do not attempt to drive the vehicle until you have understood these instructions

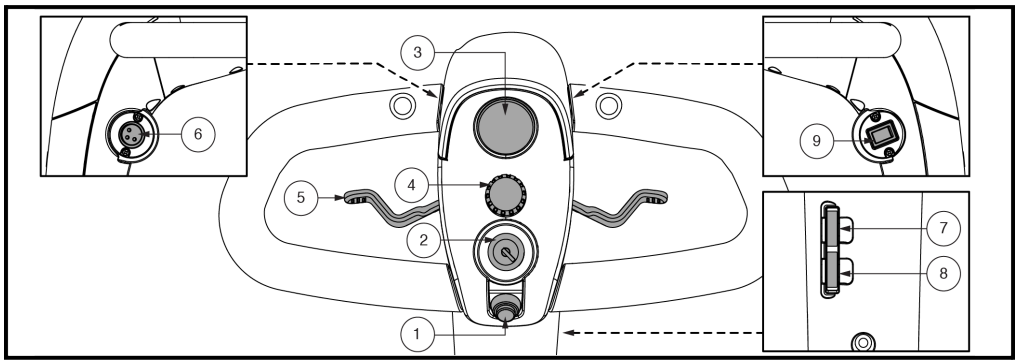

Identification Key
1. Horn
2. Key Switch
3. Battery Condition Meter
4. Speed Adjustment Dial
5. Throttle Control Lever (Wig-Wag)
6. Charger Power Cord Receptacle (Tiller Port)
7. Off-Board Charger Fuse
8. Light Fuse
9. Light Switch

To Turn On: Insert the key vertically and turn 90° clockwise.
To Turn Off: Turn key back counter-clockwise.

To Operate: The throttle control lever (Wig-Wag) allows you to control the forward and reverse speed of your scooter. Use your right thumb to push the right side of the lever to disengage the brakes and to move forward. Release the lever and come to a stop, before pushing the other side of the lever to move in reverse.

Battery Condition Meter: When the scooter is powered up, this meter indicates approximate battery strength.
Note: The vehicle must be stationary in order to get an accurate reading.

Speed Adjustment Dial: This dial allows you to preselect and limit the scooters top speed. The image of the tortoise represents the slowest speed setting. The image of the hare represents the fastest speed setting.

Horn: The horn will sound when the button is depressed.

Lights: To switch on the lights, toggle the switch forward. To turn off, toggle the switch backwards.

Freewheeling the Scooter
There may be occasions where you may wish to move the vehicle without power. To do this there is a freewheel lever.

- Locate the manual freewheel lever at the top right of the rear section.
- Push forward on the manual freewheel lever to disable to the drive system and the brake system. You may now push the scooter.
- Push the manual freewheel lever rearward to re-engage the drive and brake systems; this takes your travel scooter out of the freewheel mode.
- Never attempt to activate free-wheel mode when the scooter is stopped or parked on a significant slope.

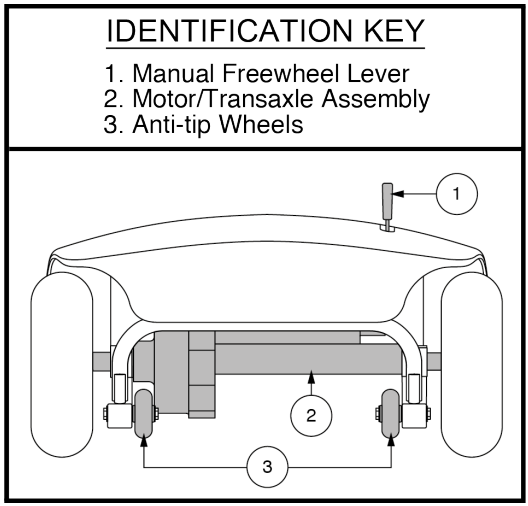

Main Circuit Breaker (Reset Button)
When the voltage in your scooters batteries becomes low or the travel scooter is heavily strained, the main circuit breaker may trip to protect the motor and electronics from damage. **This button is located on the battery pack.**

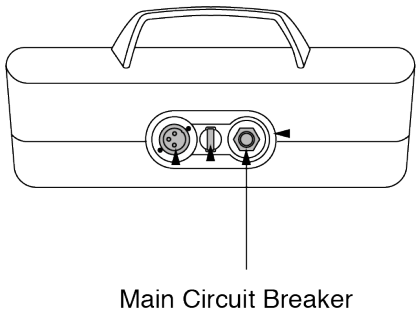

- The main circuit breaker reset button pops out when the breaker trips.
- Allow a minute or two for your scooters electronics to rest.
- Push in the reset button to reset the main circuit breaker.
- If the main circuit breaker trips frequently, you may need to charge your batteries more often. If it trips repeatedly after this, contact Clearwell Mobility.

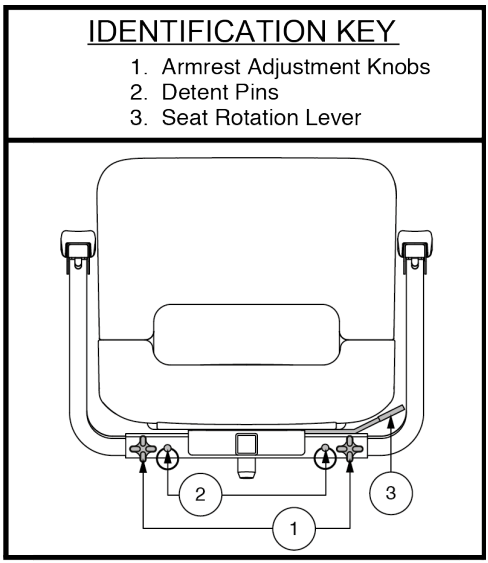

Armrest Width Adjustment
The armrest width can be adjusted inwards and outwards.

Loosen the armrest adjustment knobs and use the attached ring to pull and remove the detent pins. Slide the armrest in or out to the desired width. Align the adjustment holes on the seat frame and armrest, then reinsert the detent pins. Tighten the armrest adjustment knobs.

Seat Rotation Adjustment
The seat rotation lever, located on the right side of the seat base, secures the seat into several positions.

Pull up on the seat rotation lever to disengage the seat. Rotate the seat to the desired position. Release the lever to secure the seat into place.

Seat Height Adjustment
The seat can be repositioned to different heights.

Remove the seat and battery pack from your scooter and use the attached ring to pull and remove the detent pin from the lower seat post. Raise or lower the upper seat post to the desired seat height, align the adjustment holes and reinsert the detent pin. Replace the battery pack and seat.

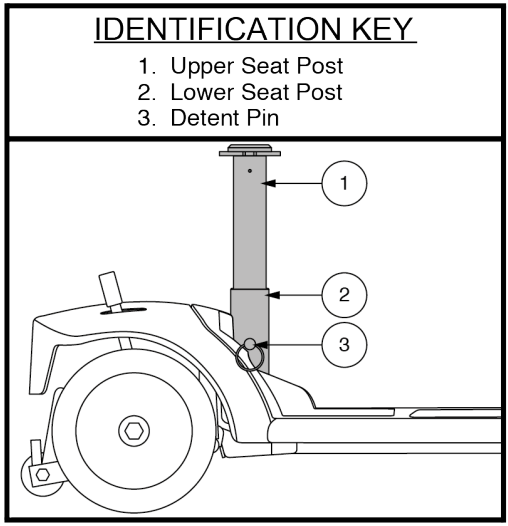

Disassembly
You can disassemble the scooter into several pieces; the seat, the rear section, the front section, the basket and the battery pack. No tools are required to disassemble or assemble your scooter. Always disassemble or assemble your travel scooter on a level, dry surface. Remember that some components are heavy and you may need assistance when lifting them.

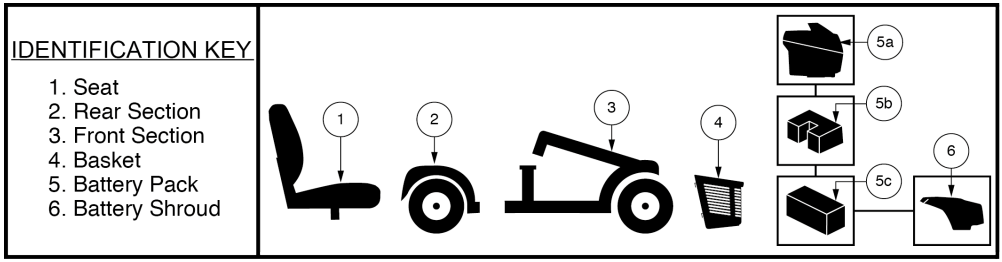

Disassembly Proceedure
1. Remove the key from the switch and then lock the tiller in the straight ahead position by pushing the tiller lock knob in and turning it clockwise 90°. The front wheel must face forward to lock the tiller.

2. Remove the seat by lifting it straight up and off of the scooter. If you encounter resistance, disengage the seat rotation lever and swivel the seat back and forth while lifting up.

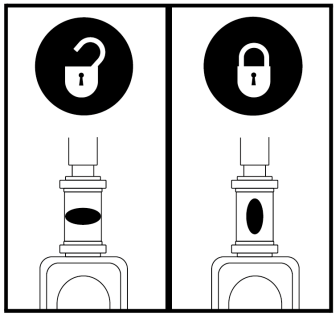
Tiller Lock Knob

3. Remove the battery pack by lifting the pack straight up and off of the scooter.

Frame Separation
1. With the seat and battery pack removed, lower the tiller and tighten the tiller adjustment knob.

2. Lift up on the frame release lever and pivot the rear section backwards, until the frame hooks are no longer resting on the lower frame tube.

3. Slowly separate the two sections of the travel scooter.

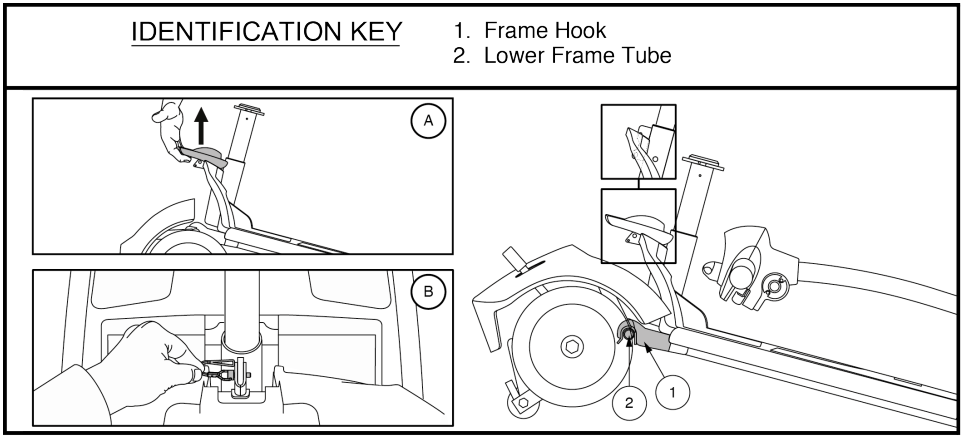

Assembly
Note: Before assembly, tilt the rear half of the scooter slightly back on the anti-tip wheels as shown in the above diagram.

1. Use the frame release lever to lift the front section as you align the frame hooks of the front section with the lower frame tube of the rear section.

2. Once the frame hooks are over the lower frame tube, lower the front section and pivot the rear section simultaneously. This will engage the frame lock up automatically.

3. Raise the tiller and fully tighten the tiller adjustment knob.

4. Reinstall battery pack.

5. Reinstall the seat and rotate until it is secured into place.

6. Unlock the tiller by turning the tiller lock knob 90° counter-clockwise.

WARNING: After assembly, make absolutely certain the tiller lock knob is in the unlocked position before riding your scooter.

Battery Pack
A handle on top of the battery pack makes it easy to lift the pack off of the scooter. The battery pack contains two rechargeable batteries, the charger power cord receptacle, the main circuit breaker and the battery pack fuse.

Identification Key:
1. Battery Pack
2. Battery Pack Handle
3. Charger Power Cord Receptacle
4. Battery Pack Fuse
5. Main Circuit Breaker (Reset Button)
6. Battery Cable Wiring Harness
7. Battery Terminals
8. Tiller Console Fuse

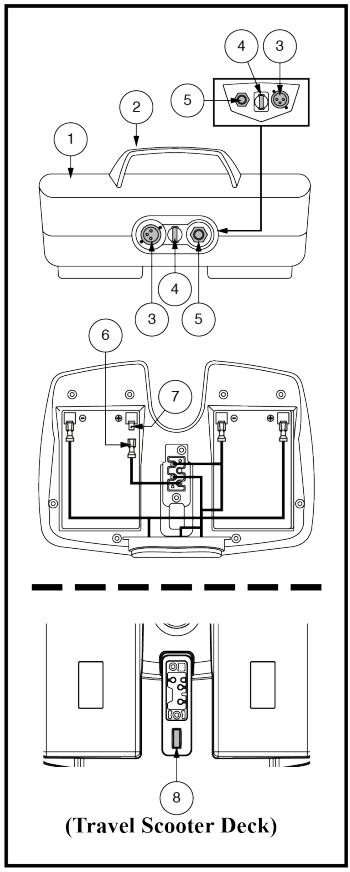

(Travel Scooter Deck)

Battery Charging
Your travel scooter requires two long lasting 12 volt deep cycle batteries that are sealed and maintenance free. They are recharged by the supplied off-board charging system.

Charge your scooters batteries for at least 8-14 hours prior to using it for the first time. WARNING: The charger is designed for indoor use. Do not use outdoors or expose to rain, snow, spray or moisture.

Reading your Battery Voltage
From right to left on the meter, green indicates fully charged, yellow a draining charge and red indicates that an immediate recharge is necessary.

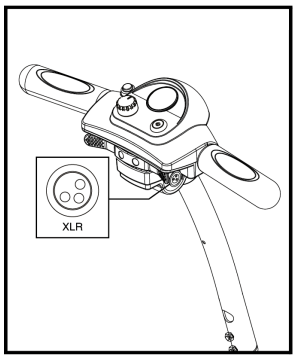

Charger Power Cord Receptacle (Tiller Mounted)

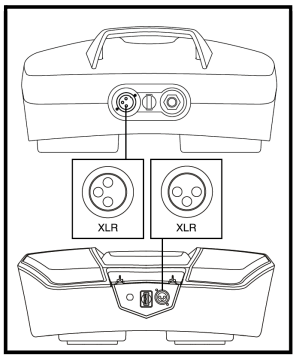

Charger Power Cord Receptacle (Battery Pack)

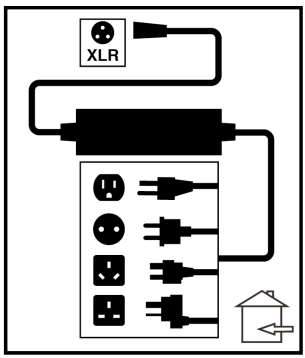

Off-board Battery Charger

Simple Maintenance
Maintenance should only be carried out by a qualified engineer.

You should check the following before each journey:
1. Visually check the tyres for damage and their pressure.
Caution: Not maintaining your tyre pressures will affect stability and range.
2. Check the steering moves freely.
3. The tiller knob is tight.
4. The seat is located correctly and locked.
5. Check the armrests are secure.
6. Batteries are fully charged.
7. The front basket is secure.

Anti-tip Wheels
These are factory fitted and should not be removed. The anti-tip assembly is bolted to the rear frame of the scooter. **Never use the scooter without the anti-tip wheels fitted.**

Important- Possible Faults
As you get used to your vehicle you will get a feel for how it behaves. If something feels unusual, for instance the vehicle does not accelerate or brake smoothly, the brakes are not holding on a slope or the steering feels different; contact Clearwell immediately and explain to an engineer what the problem is, as this will help diagnose the problem.

Cleaning the Scooter
Ensure the controller is switched off before cleaning.

The scooter should be wiped over once per week with a slightly damp (not wet) cloth. Make sure to dry thoroughly after cleaning.

IMPORTANT: Do not use a hose or pressure or steam washer to clean your scooter.

Cleaning the Control System
Clean the control system and the keypad with a cloth dampened with diluted detergent. Be careful not to use excessive water or force when cleaning the control keypad.

Getting on and off the Vehicle
• When getting on, make sure that the vehicle is on level ground and not in freewheel mode.
• Ensure that the armrests are secure.
• When getting off, park on level ground, turn off the ignition and remove the key before leaving your seat.

Tiller Lock Knob
• Never drive with the tiller lock knob in the locked position, as injury could result from not being able to turn.

Kerbs and Obstacles
• Do not ride up kerbs or obstructions higher than that in the Technical Specification Sheets.
• Always tackle kerbs and obstacles head on.
• The anti-tip rollers at the rear of the scooter may contact the kerb as you descend, this may cause a noise, which is normal.
• Take great care to avoid tipping.
• Never make sharp turns on slopes.

Try to avoid crossing slopes - always try to drive straight up and down the slope - never reverse down a slope.

Going Up a Hill
• Lean forward when going up hill.
• Make sure you have enough speed to climb the slope.
• Do not stop or turn the vehicle around.
• If you have to turn whilst going up an incline keep going until you reach a level area.
• If you have to start on an incline, lean forward and apply power slowly.
• Consider adjusting your seat forward if you're not comfortable with the gradient.

Going down a hill
• When going down a hill lean back in the seat, and turn the speed control dial to low.
• If you are not comfortable with the hill gradient, consider adjusting your seat position further back.

Ramps
• When using a ramp for access, please ensure that it is capable of taking the combined weight of the scooter and yourself and ensure that the ramp is stable and properly secured.

Stowed Transport
•Follow the disassembly instructions to correctly dismantle your scooter for stowed transport.

Transportation in Vehicles
• This scooter is not suitable to use as a seat in a vehicle, it has not been crash tested.
• For transportation by road, rail, sea or air, please contact the appropriate carrier.

Turning
• Slow down and look in the direction you are travelling.
• Sound the horn on blind corners.

Bad Weather
• This product should not be used in snowy or icy conditions.
• Ice, snow and slippery surfaces such as manhole covers, wet grass and drains can affect braking and steering.

Solid Tyres
• Your vehicle is fitted with solid tyres. Regularly check them for signs of damage or wear.

Front Basket
• The basket mounted on the front has a weight limit of 10lbs (5kgs). Do not exceed this as it could affect the steering.

Handlebars
• Do not carry or attach anything to the handlebars. Anything attached to the vehicle handlebars will affect the control of the vehicle.

Floor Area
• Do not use the floor area to carry additional items.

Other Items
• Only fit approved products or accessories.

Child Safety
• This product is designed to be operated by adults.
• Children should not be allowed to tamper with the controls or play on the vehicle.
• Do not carry children as passengers, this product is designed for single person use only.

Troubleshooting Guide

This table is a guide to fault finding. A diagnostic beep code will sound in the event there is a fault with your scooter. Depending on the model you own, your scooter will communicate one of the following ways:

1) A beep code will begin with a series of fast beeps followed by slower beeps that indicate the code. The beep code is only sounded once. To repeat the code, remove the key and then reinsert it and turn it on.

or

2) A beep code will identify the condition, pause, then repeat the beep code. The beep code will continue until the scooter is turned off.

No. of Beeps	Condition	Solution
1	Battery voltage is too low to operate the scooter	Charge batteries as soon as possible
2	Battery charge is too low	Charge batteries
3	The scooters battery voltage is too high to operate the scooter, or the charger is still connected to the off-board charger port	Unplug charger and/or turn key off, then back on again. If traveling down a slope, reduce scooter speed to the minimum setting
4	Current limit times out	Turn the scooter off for a few minutes then turn it back on
5	The manual freewheel lever is in the forward freewheel position	Remove key then push the manual freewheel lever to the drive (rearward) position and restart your scooter
6	Throttle control lever not at centre position at start up	Verify that the batteries are fully charged. If the batteries are fully charged, then return the throttle control lever to centre position, turn scooter back on
7	Speed Pot error	Contact Clearwell Mobility for assistance
8	Motor Volts error	Contact Clearwell Mobility for assistance
9	Other internal errors	Contact Clearwell Mobility for assistance

Symptom	Solution
Scooter does not move when the throttle control lever is pressed	When the manual freewheel lever is pushed forward, the brakes are disengaged and all power to the motor/ transaxle assembly is cut. Pull back on the manual free-lever, turn the scooter off and then back on to return to normal operation.
All systems are dead	Ensure the key is in the 'on' position. Check that the batteries are charged. Push the main circuit breaker reset button, (see page 4). Check the tiller console fuse under the battery pack.
Batteries will not charge	Check the fuse located on the battery pack or console. Ensure both ends of the charger power cord are connected properly. If the battery fuse continuously blows, contact Clearwell Mobility.
Main circuit breaker repeatedly trips	Charge the scooters batteries more frequently. Have both of the batteries load tested. Contact Clearwell Mobility.

What to do next?
If you are unable to solve the issue using the troubleshooting table, carry out the following:

- Switch the scooter off.
- Check that none of the plugs and sockets have become loose or disconnected.
- Check the condition of the battery and charge it if necessary.

WARNING:
- If the safety circuits continue to operate, switch off and do not try to use the scooter.
- Contact Clearwell Mobility.

Repairs- After Sales Service
Your original receipt acts as your guarantee and confirms your guarantee period. Please make sure you retain it. The guarantee does not cover you against faults caused by accidental damage or misuse. For further details visit www.clearwellmobility.co.uk/warranty-information. If your purchase is not working correctly, please refer to the 'troubleshooting' chapter in this manual. If a fault occurs which you cannot resolve through following the advice and information contained within this instruction manual, the next step is to contact Clearwell Mobility on **01444 253 300**.

When you contact Clearwell Mobility you will need to give the following details:
1. Your name, address and post code
2. Your telephone number
3. Clear and concise details of fault
4. The purchase date as found on your receipt
5. The model and serial number of your scooter (These can be found on the label stuck to the outside of your scooter pack).

IMPORTANT: If you call out an engineer to a fault listed under the heading 'troubleshooting' or to repair a fault caused by incorrect use, a call out charge will be made even if the scooter is under guarantee.

Spare Parts
Always insist on genuine spare parts

An authorised Clearwell Mobility engineer should service this product and only genuine spare parts should be used.

Under no circumstances should you attempt to repair the product yourself. Repairs carried out by inexperienced persons may cause injury or further damage to the equipment.

One Year Warranty
Clearwell Mobility warrants its products against defects in materials and workmanship for a period of one year, providing the products are operated and maintained in accordance with the vehicles owners manual. This warranty is limited to the original purchaser.

If a defect appears within the warranty period and the purchaser has given Clearwell Mobility immediate notice, the company will repair or replace the part. Any description, specifications, samples, models, bulletins or similar materials used in connection with the sales of Clearwell Mobility products are for the purpose of identifying the equipment and are not to be construed as expressed warranties.

Clearwell Mobility shall not be liable for any indirect or consequential damages. Clearwell Mobility's liability on any claim of any kind including negligence for any loss or damage arising out of, connected to, or resulting from the design, manufacture or use of the equipment shall in no case exceed the price paid by the purchaser for the equipment.

This limited warranty does not cover normal maintenance service, or periodic adjustments necessitated by normal wear and tear.

ISO 7176-15	SPEC	COMMENTS
Weight capacity	21st 6lbs (136kg)	
Overall length	41" (104.1cm)	
Overall width	20.5" (52.1cm)	
Overall height	33.5-35" (85.1-88.9cm)	
Total mass (without batteries)	87.4lbs (39.6kg)	
Mass of the heaviest part (front section)	36.6lbs (16.6kg)	
Max angle capacity	9° (15.8%)	
Max allowable incline	6° (10.5%)	
Obstacle climbing	2" (5cm)	
Max. speed forward	4mph (6.4km/h)	
Drive system	Rear wheel drive, sealed transaxle, 24 volt DC motor	
Dual braking system	Regenerative and electromechanical	
Suspension	Independent CTS suspension	(Comfort-Trac front & rear independent suspension)
Seat height	13.5" (34.3cm)	
Seat to floor height	16.25-17.75" (41.3-45.1cm)	
Standard Seating	Width: 18" (45.7cm) Depth: 16.5" (41.9cm) Weight: 23lbs (10.4kg)	Type: folded Material: black vinyl
Turning radius	44.75" (116.2cm)	
Potential range	Up to 10.5 miles (16.9km)	17Ah battery pack
Battery charger	2 amp off board charger	
Battery pack weight	30.4lbs (13.8kg)	17Ah battery pack
Battery requirements	Two 12 volt deep cycle	12Ah or 17Ah
Standard controls	LED display	
Ground clearance	1.5" (3.8cm)	
Tyres	Front: 2" x 7" Rear: 2.5" x 8"	Solid

Clearwell mobility

Clearwell Mobility
21 Albert Drive
Burgess Hill
West Sussex
RH15 9TN
Call Us: 01444 253 300

www.clearwellmobility.co.uk